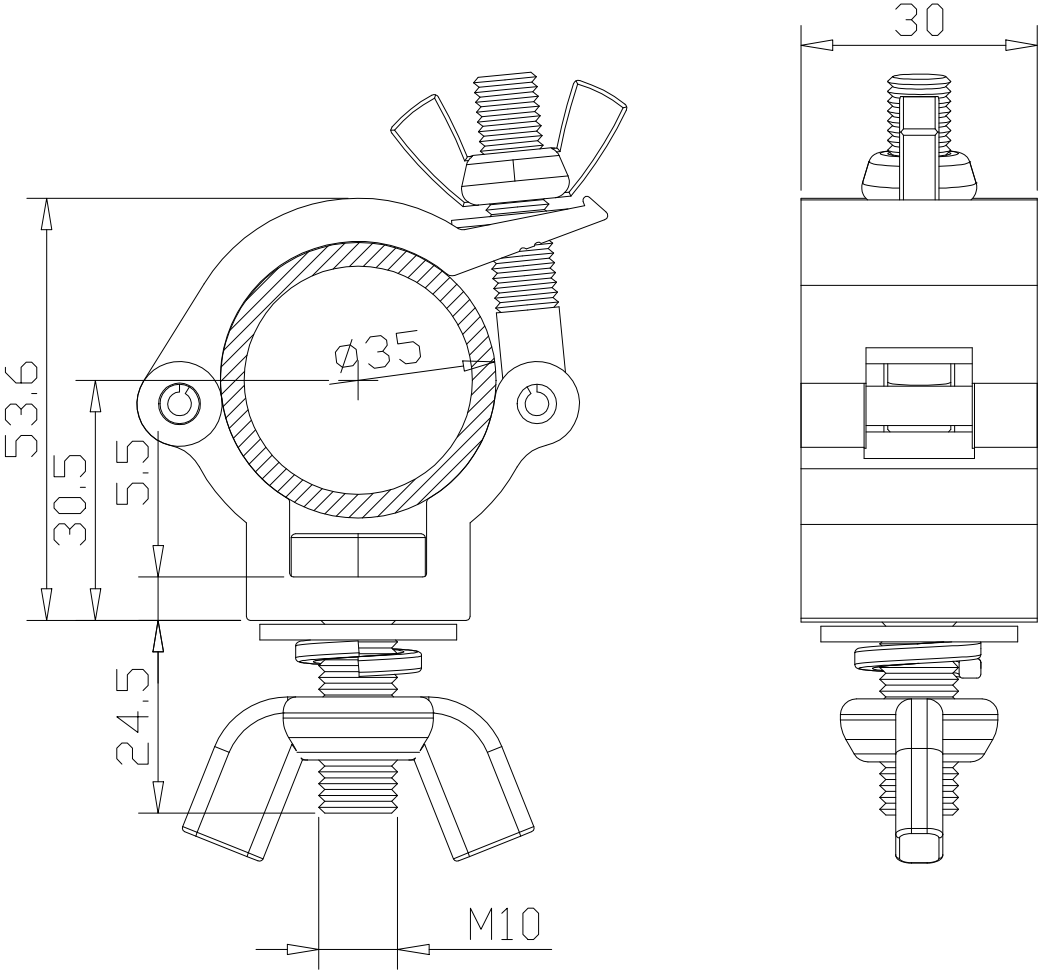
30
53.6
30.5
5.5
ø35
24.5
M10